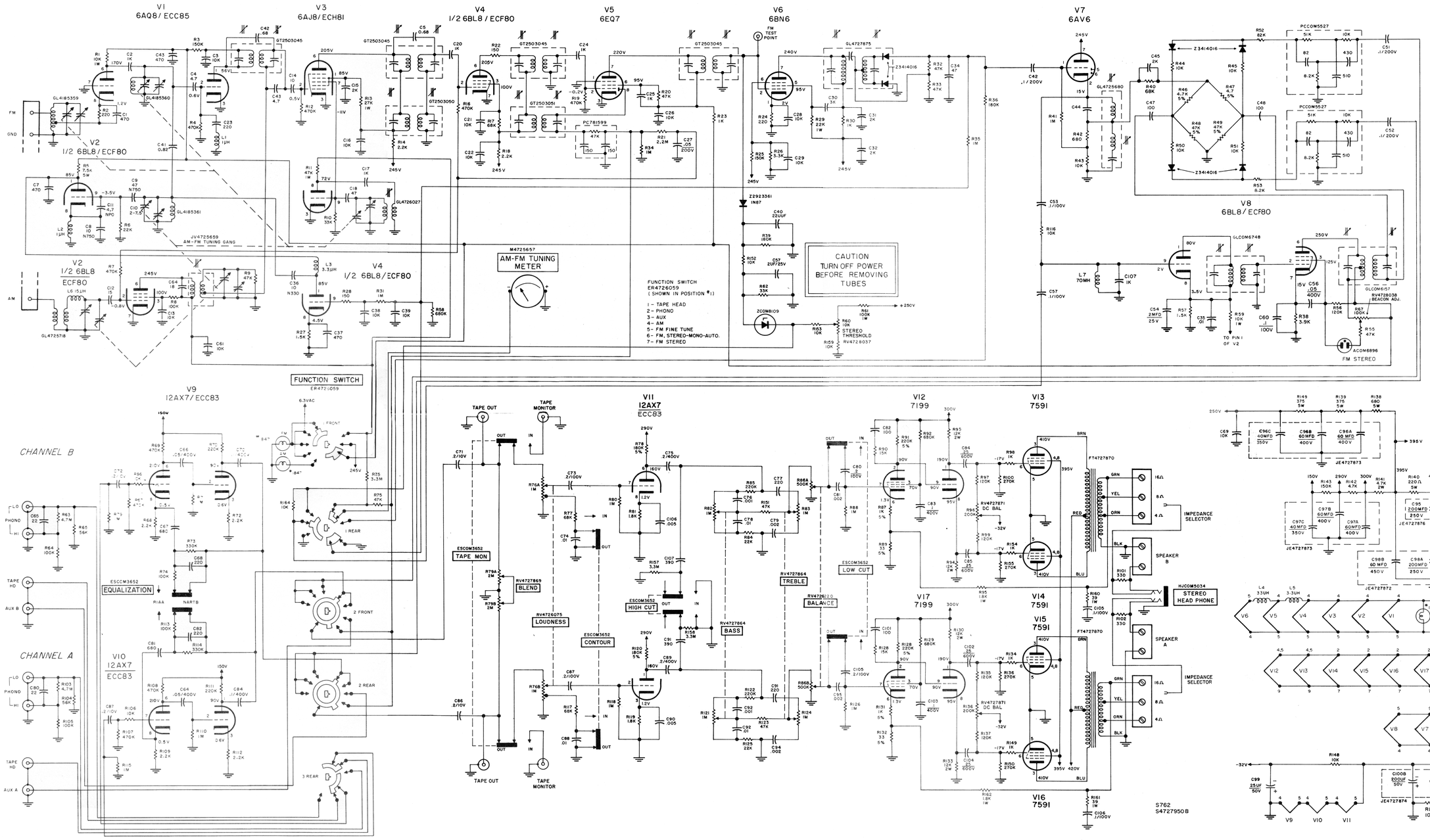

RESISTANCE READINGS

TUBE	PIN 1	PIN 2	PIN 3	PIN 4	PIN 5	PIN 6	PIN 7	PIN 8	PIN 9
V1 6AQ8	*150K	470K	0	—	—	*11.5K	0	220	—
V2 6BL8	*13.5K	470K	*100K	—	—	*1.5K	0	0	22K
V3 6AJ8	*31K	470K	0	—	—	*3.7K	33K	*48K	33K
V4 6BL8	*13.5K	470K	*71K	—	—	*3.7K	0	1.5K	1M
V5 6EQ7	0	470K	0	—	—	*49K	*2.5K	100K	0
V6 6BN6	220	0.8Ω	—	—	*23K	3.3K	*2.5K	—	—
V7 6AV6	1M	16K	—	—	—	—	*1.5K	—	—
V8 6BL8	*18K	300	*101K	—	—	*1.5K	3.9K	1.5K	10Ω
V9 12AX7	*330K	1M	2.2K	—	—	*580K	480K	2.2K	—
V10 12AX7	*330K	1M	2.2K	—	—	*580K	480K	2.2K	—
V11 12AX7	*180K	1M	1.8K	—	—	*180K	1M	1.8K	—
V12 7199	*12.5K	*225K	*680K	—	—	1K	1M	12K	—
V13 7591	—	—	140	220	—	120K	—	220	—
V14 7591	—	—	140	220	—	120K	—	220	—
V15 7591	—	—	140	220	—	120K	—	220	—
V16 7591	—	—	140	220	—	120K	—	220	—
V17 7199	*12.5K	*225K	*680K	—	—	1K	1M	12K	—

* RESISTANCE READINGS MARKED WITH ASTERISK ARE MEASURED FROM THE JUNCTION OF R140 & C94

VOLTAGE & RESISTANCE READINGS

FUNCTION SWITCH IN FM STEREO POSITION.
LOUDNESS CONTROL MAX CCW.
BLEND CONTROL IN STEREO POSITION.
BALANCE CONTROL IN CENTER.
BASS & TREBLE CONTROLS IN FLAT POSITION.
ALL SLIDE SWITCHS IN NORMAL OR OUT POSITION.

NOTES:

UNLESS OTHERWISE SPECIFIED—
1— ALL RESISTANCE VALUES IN OHMS ±10%.
2— ALL RESISTORS 1/2 WATT.
3— ALL CAPACITORS WITH DECIMAL VALUES IN MFD.
4— ALL CAPACITORS WITHOUT DECIMAL VALUES IN MMF.
5— ALL VOLTAGES ARE DC & MAY VARY ± 20%.

Harmon Kardon TA7000X

Bottom view

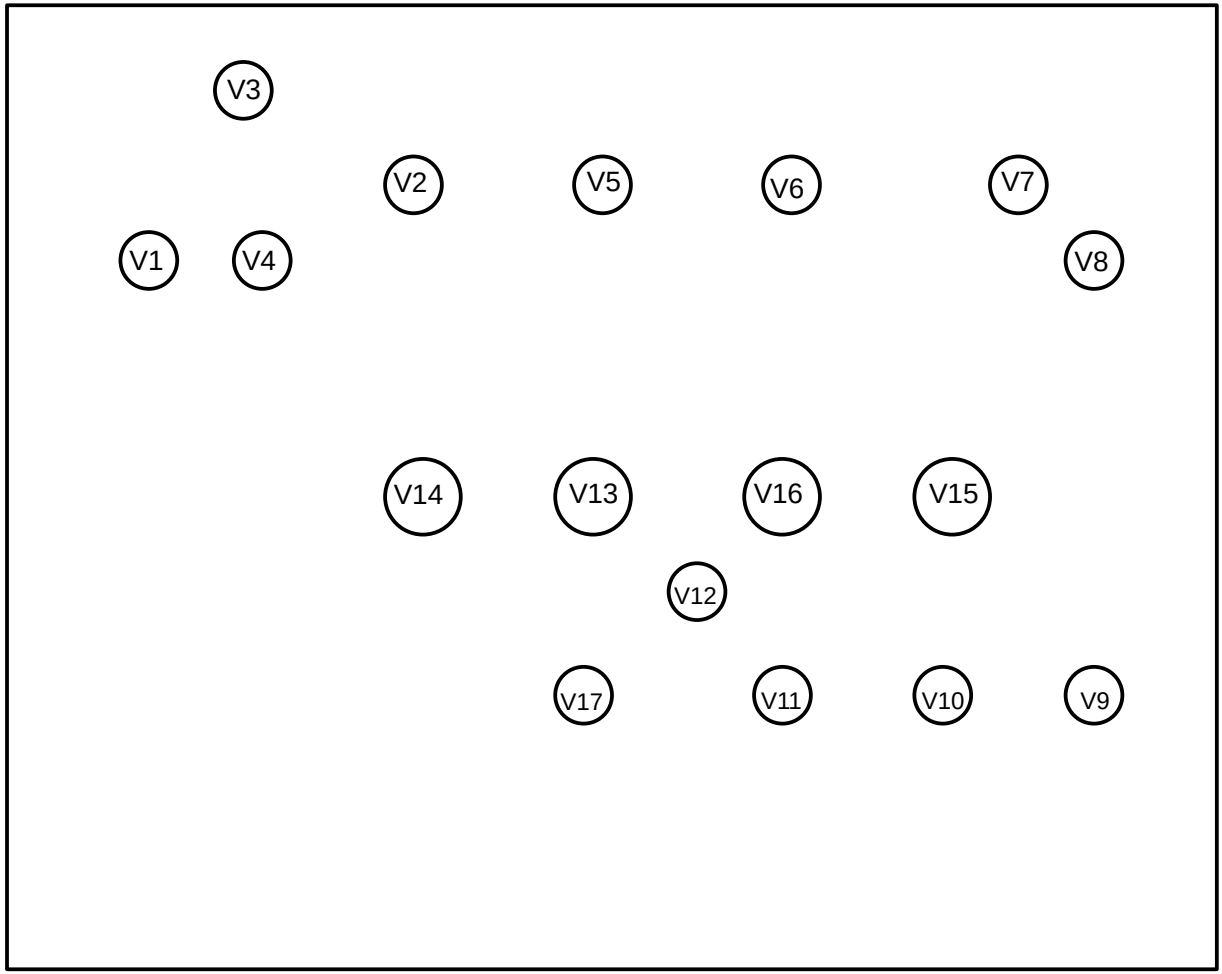

Front

V1 6AQ8
V2 6BL8
V3 6AJ8
V4 6BL8
V5 6EQ7
V6 6BN6
V7 6AV6
V8 6BL8
V9 12AX7
V10 12AX7
V11 12AX7
V12 7199
V13 7591
V14 7591
V15 7591
V16 7591
V17 7199

Harmon Kardon TA7000X

Top view

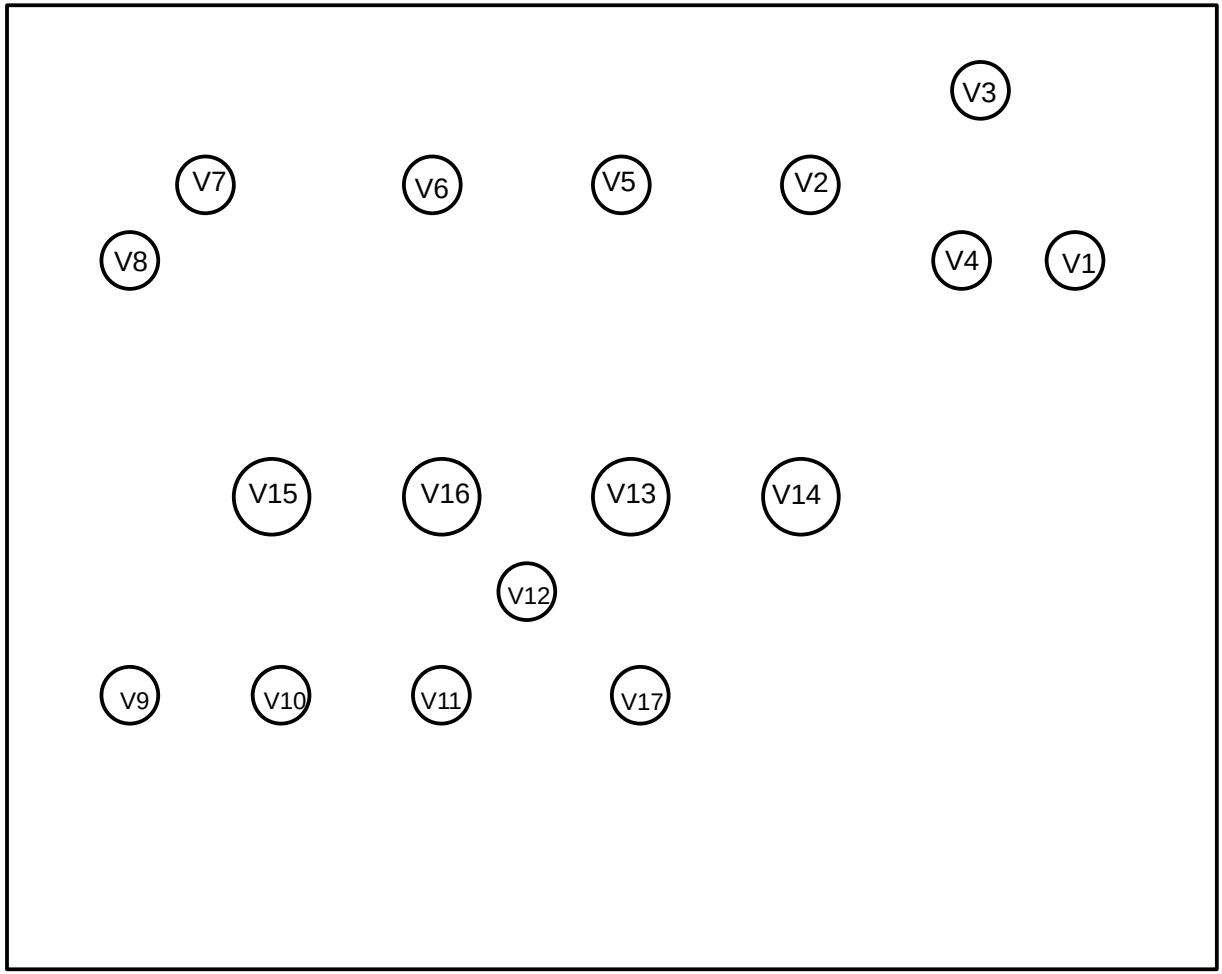

Front

V1 6AQ8
V2 6BL8
V3 6AJ8
V4 6BL8
V5 6EQ7
V6 6BN6
V7 6AV6
V8 6BL8
V9 12AX7
V10 12AX7
V11 12AX7
V12 7199
V13 7591
V14 7591
V15 7591
V16 7591
V17 7199

MULTIPLEX ALIGNMENT PROCEDURE

1. Do not attempt to align the Multiplex Circuit unless the following equipment is available:
   a. Multiplex Stereo Generator
   b. FM Signal Generator
   c. Oscilloscope
   d. AC VTVM
   e. Audio Oscillator

STEP	ALIGN.	GENERATOR	FEED SIGNAL	OUTPUT INDICATOR	ADJUST	ADJUST FOR
1	67.5 KC Trap	67.5 KC Audio Signal	Junction R34 & R36	VTVM @ Junction R46 & R47	Top & Bottom of GL4725680	Minimum
2	19 KC Transformer	FM Signal Gen Modulated 30% by Stereo Gen. Channel A	Antenna Terminals Tune to Signal	VTVM Across R56	Top of GLCOM6748	Max. DC Voltage Across R56 with Neon Bulb Disconnected
3	38 KC Transformer	Same	Same	VTVM or Scope at 38KC Trans. Output & C47 (Green Dot)	Top & Bottom of GLCOM6157	Maximum
4	38 KC Transformer	FM Signal Gen Modulated 30% by Stereo Gen Channel A	Antenna Terminals Tune to Signal	VTVM or Scope at Tape Out Put Jack B	Top & Bottom of GLCOM6157	Minimum

FM ALIGNMENT PROCEDURE

1. Turn tuning gang fully CCW. Set pointer at reference mark. 2. AFC off.

STEP	ALIGN.	GENERATOR SETTING FREQ.	GENERATOR SETTING MOD.	FEED SIGNAL	OUTPUT INDICATOR	DIAL SETTING	ADJUST	ADJUST FOR	NOTES
1	IF	10.7 MC	60 CPS	See note	Scope @ IF Test Point thru probe	91 MC	1st, 2nd 3rd, 4th IF trans.	Maximum	Remove ECC85 tube shield. Couple signal by loop around tube.
2	OSC	90 MC	60 CPS	Antenna Terminals	Same	90 MC	Osc. Coil	Maximum	
3	OSC	106 MC	60 CPS	Same	Same	106 MC	Osc. Trimmer	Maximum	
4	Repeat steps 2 and 3.								
5	RF Amp	90 MC	60 CPS	Same	Same	90 MC	Antenna Coil RF Coil	Maximum	
6	RF Amp	106 MC	60 CPS	Same	Same	90 MC	Antenna Trimmer RF Trimmer	Maximum	
7	Repeat steps 5 and 6.								
8	Discriminator	106 MC	60 CPS	Same	Scope at Tape Output Jack	106 MC	Adjust primary for maximum gain and adjust secondary for symmetry.		

AM ALIGNMENT PROCEDURE

1. Use lowest input signal for usable indication.

STEP	ALIGN.	GENERATOR SETTING FREQ.	GENERATOR SETTING MOD.	FEED SIGNAL	OUTPUT INDICATOR	DIAL SETTING	ADJUST	ADJUST FOR	NOTES
1	IF	455 KC	400 CPS	Pin 2 ECH 81	AC VTVM at Tape Output Jack	1600 KC	1st, 2nd AM IF Trans.	Maximum	
2	OSC	600 KC	400 CPS	Couple signal loosely by loop around loopstick	Same	600 KC	Osc. Slug	Maximum	
3	OSC	1400 KC	400 CPS	Same	Same	1400 KC	Osc. Trimmer	Maximum	
4	Repeat steps 2 and 3.								
5	RF	600 KC	400 CPS	Same	Same	600 KC	Loopstick Ring RF Trans.	Maximum	
6	RF	1400 KC	400 CPS	Same	Same	1400 KC	Antenna Trimmer RF Trimmer	Maximum	
7	Repeat steps 5 and 6.								

IF TEST PROBE

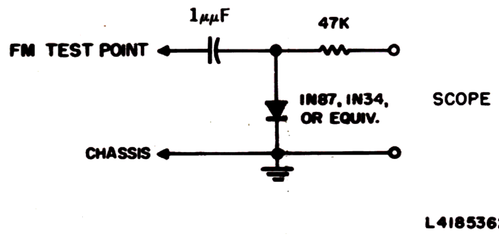

L4185362

www.hifiengine.com